SPL-LED-760

User Manual

Please read the instruction carefully before use

CONTENTS

01/ Safety Information.....3-4

02/ Technical Specifications.....5

03/ Connecting Power and Data.....5

04/ Connecting Data.....6

05/ Address Setting.....7

06/ Overview..... 8

07/ Display and operation.....8-9

08/ DMX Protoco.....10-14

09/ Troubleshooting.....15

10/ Fixture Cleaning..... 16

01/ Safety Information

Please keep this User Manual for future consultation. If you sell the unit to another user, be
sure that they also receive this instruction manual.
Important:
Damages caused by the disregard of this user manual are not subject to warranty. The dealer
will not accept liability for any resulting defects or problems.

Unpack and check carefully to ensure that there is no transportation damage before using the unit.

This product is suitable for wet locations. Do not immerse in water.

DO install and operate by qualified operator.

DO NOT allow children to operate the fixture.

Use safety chain (made of steel, min. diameter 4.0mm) when fixing the unit. Handle the
unit by carrying its base instead of head only.

The unit must be installed in a location with adequate ventilation, at least 50cm from
adjacent surfaces.

Be sure that no ventilation slots is blocked, otherwise the unit will be overheated.

Before operation, ensure that you are connecting this product to the proper voltage in
accordance with the specifications in this manual or on the product's specification label.

It's important to ground the yellow/green conductor to earth in order to avoid electric
shock.

Minimum ambient temperature TA: -10℃. Maximum ambient temperature TA: 40℃. Do
not operate this product at a lower or higher temperature.

DO NOT connect the device to any dimmer pack.

Keep flammable materials away from the fixture while operating to avoid fire hazard.

Make sure the power cord is not crimped or damaged; replace it immediately if damaged.

Unit's surface temperature may reach up to 70℃. DO NOT touch the housing bare-handed during its operation.
Avoid any flammable liquids, water or metal from entering the unit. Once it happens, cut
off the mains power immediately.

DO NOT operate in a dirty or dusty environment. DO clean the fixture regularly.

DO NOT touch any wire during operation as there might be a hazard of electric

shock.

Avoid entanglement of the power cord with other wires.

The minimum distance to objects/surface must be more than 4 meters.

In the event of serious operating problem, stop using the unit immediately.

Never turn on and off the unit time after time.

The housing, the lenses, or the ultraviolet filter must be replaced if they are visibly damaged.

DO NOT open the housing as there are no user serviceable parts inside.

DO NOT attempt to operate this unit if it becomes damaged. DO NOT attempt any repairs yourself. Repairs carried out by unskilled people can lead to damage or malfunction. Please contact the nearest authorized technical assistance center if needed.

Disconnect this product from its power source before servicing.

DO use the original packaging if the device is to be transported.

Check that the head tilt lock is released before packing for transportation.

Avoid direct eye exposure to the light source while the product is on.

DO NOT operate this product if you see damage on the housing, shields, or cables. Have
the damaged parts replaced by an authorized technician at once.
External sources of light beams from direct sunlight or any other strong light source, which penetrate the front lens of lighting fixtures, can cause severe internal damage. DO
NOT expose the fixture front lens to light beams from direct sunlight or any other strong
light source from any angle while unpacking, installation, use, and extended idle times outdoors. DO NOT focus a light beam from one lighting fixture directly towards another.

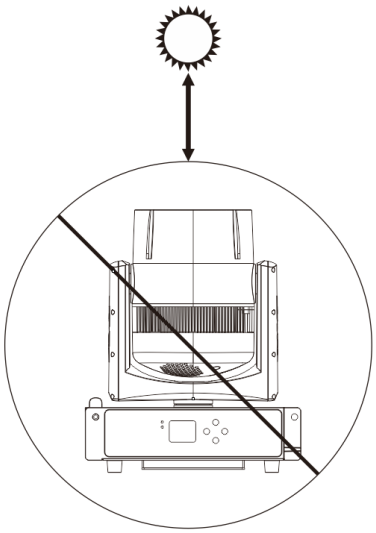

02/ Technical Specifications

Input voltage：AC100-240V 50/60Hz
Power consumptionn：500W
LED QTY：7*60WRGBW(4IN1)
Average lifespan：50000 hours
Beam angle：4°- 50°
Electronic Dimming：0-100%
Strobe：1S/25，Focus：Yes，Rotate：Yes，Pan：540° ，Tilt：270°
DMX channel：23/35/51 CH
Control mode：DMX /RDM
Display mode：LED
IP rating：IP20
Product dimension： 275*210*365mm
N.W：6.8kG

03/ Connecting Power and Data

To apply power, first check that the head pan and tilt locks are released.
This fixture can operate on any 180-240Vac; 50/60Hz AC mains power supply.
The maximum power consumption is 500W.
The fixture must be grounded/earthed and able to be isolated from AC power. The AC power
supply must incorporate a fuse or circuit breaker for fault protection.
Wiring and connection work must be carried out by a qualified electrician.
The power cable color coding is given in the figure below:

Wire	Color (US)	Wire	Color (EU)	Symbol	Conductor
	black		brown	L	live
	white		blue	N	neutral
	green		yellow/green	⏚ or ⏚	ground (earth)

Power cord set should be used: Listed SJOW flexible cord with rating: 300V, 105°C, VW-1,
14AWG x 3C, molded with 5-20P attachment plug and terminated with cord connector model RCAC3F-X-000-01 with rating 250V, 16A by Neutrik Technology (Ningbo) Co., Ltd.
The power cord shall be at least 914mm (It is to be measured from the face of attachment
plug to the face of connector).
CAUTION!
DO NOT CONNECT THE FIXTURE TO AN ELECTRICAL DIMMER SYSTEM AS DOING SO MAY CAUSE DAMAGE.

04/ Connecting Data

The fixture is equipped with 5-pin (or 3-pin) XLR sockets for DMX input and output. Use a
high-quality DMX cable designed for RS-485 and 5-pin (or 3-pin) XLR-plugs and connectors
in order to connect the controller with the fixture or one fixture with another. For outdoor
installations, use only IP-rated XLR connectors suitable for outdoor use.
Building a serial DMX chain:
Connect the DMX data output from the controller to the fixture's data input socket. Connect
the DMX output of the first fixture in the DMX chain with the DMX input of the next fixture.
Always connect one output with the input of the next fixture until all fixtures are connected.
Up to 32 fixtures can be connected to the same DMX link. Terminate the DMX out cable of
the last fixture in the data link with a 120 ohm DMX terminator.

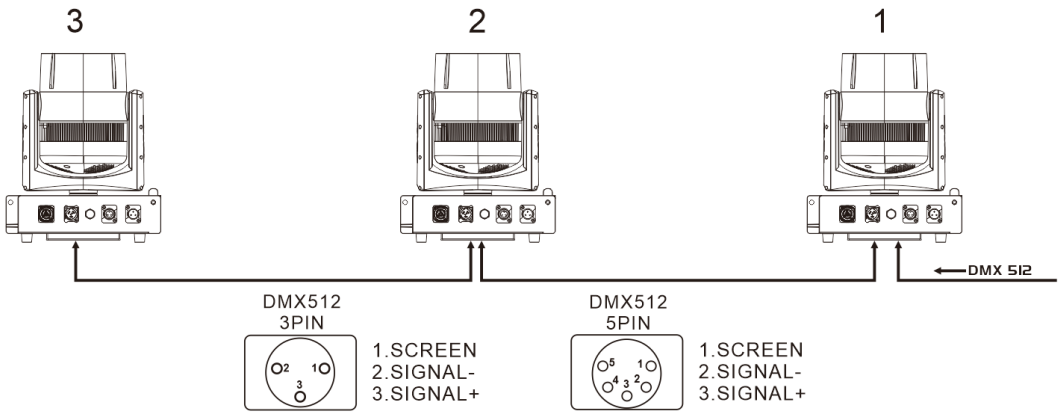

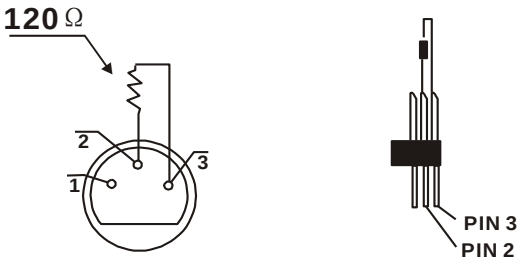

05/ Address Setting

All fixtures should be given a DMX starting address when operating with a DMX controller, in order to ensure that the correct fixture responds to the correct control signal. Incorrect settings will result in unpredictable responses from the lighting controller.

You can set the same starting address for all fixtures or a group of fixtures, or set different addresses for each individual fixture.

Setting all fixtures to the same DMX address will cause all fixtures to react in the same way. In this case, please note that changing the settings of one channel will affect all the fixtures simultaneously.

If you set each fixture to a different DMX address, each unit will "listen" starting at the channel number you have set, based on the quantity of DMX channels of each fixture. That means changing the settings of one channel will only affect the selected fixture.

For example, if the first fixture is set to 43 ch DMX mode with a start DMX address of 1, the following fixture in the DMX chain should then be set to a DMX address of 44. As the first fixture uses all the first 43 DMX channels, the next available channel is 44 (43+1=44 >> 44). See the chart below for more details:

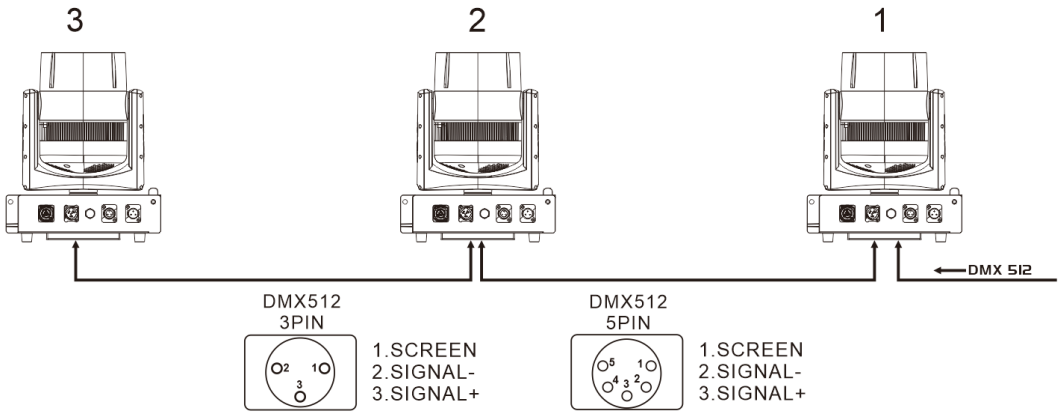

Channel Mode	Unit 1 Address	Unit 2 Address	Unit 3 Address	Unit 4 Address	Unit xxx Address
43 channels	1	44	87	130	……
34 channels	1	35	69	103	……
32 channels	1	33	65	97	……
23 channels	1	24	47	90	……

06/ Overview

• 1. Display	To show the various menus and the selected function	
• 2. Buttons	MENU	To enter into move backward or leave the menu
	UP	To go backward to move up in the menu
	DOWN	To go forward to move down in the menu
	ENTER	To perform the desired functions

Menu key: enter/return to the main menu.

Up key: menu function up selection/parameter increment.

Down key: menu function down selection/parameter decreasing.

Enter key: select the menu function, and confirm and save it when the menu function parameters are modified.

Second, the menu function

After the machine is powered on and reset, press the menu key to enter the main menu (exit after 30 seconds of no operation in the main menu interface). See the main menu menu (5 main menu options in total) for details. Press the Up or Down key to select the main menu, enter the Enter key to modify the function parameters of each menu, and then press the Enter key to save the current function parameters after modification (with power-off memory after saving).

07/ Display and operation

Main Menu	Second	Third	Fourth
Dmx Address	000 - 512		
Fixture	Dmx Mode	35CH / 23CH / 51CH	
	Run Mode	DMX / Host	
	Pan Invert	Close / Open	
	Tilt Invert	Close / Open	
	Dmx Signal	Clear / Hold	
Manual	Pan	000 - 255	
	Pan Fine	000 - 255	
	Tilt	000 - 255	
	Tilt Fine	000 - 255	
Information	Time	Current Time	xxxH

		Total Time	xxxH
		Power Count	xxx
	Sensor	All Sensors are ok/ Pan/Tilt/Zoom/ZoomRo 、Temp	
	Temperature	Head Temp	xxxC
		Fan Speed	xxxxRPM
	Software Version	Panel	Vx.xx
		Motor	Vx.xx
		Dimmer	Vx.xx
Factory	Password	000 - 255	
	Pan	000 - 255	
	Tilt	000 - 255	
	Zoom	000 - 255	
	ZoomRo	000 - 255	
	Red	000 - 255	
	Green	000 - 255	
	Blue	000 - 255	
	White	000 - 255	
Fixture Reset	Motor Reset	Cance / Run	
	Factory	Cance / Run	
Display	Language	CH / EN	
	Display Flip	Normal / Reverse	
	Display Mode	60s / Show	

08/ DMX Protoco

CH23-CHANNEL MODE:

1	Pan	0 - 255	Horizontal control
2	Pan fine	0 - 255	Horizontal fine-tuning control
3	Tilt	0 - 255	Vertical control
4	Tilt fine	0 - 255	Vertical fine-tuning control
5	P&T speed	0 - 255	P&T speed from fast to slow
6	Zoom	0 - 255	Zoom
7	Zoom rotation	0 - 127	0 ~ 60 degrees
		128 - 190	Clockwise polar rotation
		191 - 192	Stop
		193 - 255	Counterclockwise and infinite rotation
8	Dimmer	0 - 255	Linear dimming occrus from dark to light
9	Strobe	0 - 3	Lighting off
		4 - 103	Synchronous strobe speed is ranging from slow to fast
		104 - 107	Light up
		108 - 207	Flat-split strobe speed is ranging from slow to fast
		208 - 212	Light up
		213 - 225	Low speed random flash
		226 - 238	Medium speed random flash
		239 - 251	High speed random flash
		252 - 255	Light up
10	Red	0 - 255	Red dimming
11	Green	0 - 255	Green dimming
12	Blue	0 - 255	Blue dimming
13	White	0 - 255	White dimming
14	Linear CTO	0 - 255	Linear color temperature regulation
15	Macro Color	0 - 255	Color macro function

16	Static effect	0 - 255	Static effect
17	Dynamic effect	0 - 255	Dynamic effect
18	Effect speed	0 - 255	Effect speed
19	Background R	0 - 255	The background is red
20	Background G	0 - 255	The background is green
21	Background B	0 - 255	The background is blue
22	Background W	0 - 255	The background is white
23	Reset	0 - 250	NF
		251 - 255	The lamp body reset was valid for 5s

CH35-CHANNEL MODE:

1	Red	0 - 255	Red dimming
2	Red fine	0 - 255	Red fine turning
3	Green	0 - 255	Green dimming
4	Green fine	0 - 255	Green fine turning
5	Blue	0 - 255	Blue dimming
6	Blue fine	0 - 255	Blue fine turning
7	White	0 - 255	White dimming
8	White fine	0 - 255	White fine turning
9	Linear CTO	0 - 255	Linear color temperature regulation
10	Macro Colour	0 - 255	Color macro function
11	Strobe	0 - 3	Lighting off
		4 - 103	Synchronous strobe speed is ranging from slow to fast
		104 - 107	Light up
		108 - 207	Flat-split strobe speed is ranging from slow to fast
		208 - 212	Light up
		213 - 225	Low speed random flash
		226 - 238	Medium speed random flash

		239 - 251	High speed random flash
		252 - 255	Light up
12	Dimmer	0 - 255	Linear dimming occrus from dark to light
13	Dimmer fine	0 - 255	Tuning fine-tuning control
14	Pan	0 - 255	Horizontal control
15	Pan fine	0 - 255	Horizontal fine-tuning control
16	Tilt	0 - 255	Vertical control
17	Tilt fine	0 - 255	Vertical fine-tuning control
18	Function	0 - 255	Obligate
19	Reset	0 - 250	NF
		251 - 255	The lamp body reset was valid for 5s
20	Zoom	0 - 255	Foucus
21	Zoom rotation	0 - 127	0 ~ 60 degrees
		128 - 190	Clockwise polar rotation
		191 - 192	Stop
		193 - 255	Counterclockwise and infinite rotation
22	Shape selection	0 - 255	Shape rotation
23	Shape speed	0 - 255	Shape effect speed control
24	Shape fade	0 - 255	Shape effect is downplayed
25	Shape R	0 - 255	The shape effect is red
26	Shape G	0 - 255	The shape effect is green
27	Shape B	0 - 255	The shape effect is blue
28	Shape W	0 - 255	The shape effect is white
29	Shape dimmer	0 - 255	The effect with 0-100% dimming
30	Background dimmer	0 - 255	Background for 0-100% dimming
31	Shape transition	0 - 255	The shape effect change control
32	Shape offset	0 - 255	The effect angle adjustment
33	Foreground strobe	0 - 255	Foreground strobe
34	Background strobe	0 - 255	Background strobe
35	Background select	0 - 255	Background selection

CH51-CHANNEL MODE:

1	Pan	0 - 255	Horizontal control
2	Pan fine	0 - 255	Horizontal fine-tuning control
3	Tilt	0 - 255	Vertical control
4	Tilt fine	0 - 255	Vertical fine-tuning control
5	P&T speed	0 - 255	P&T speed from fast to slow
6	Zoom	0 - 255	Zoom
7	Zoom rotation	0 - 127	0 ~ 60 degrees
		128 - 190	Clockwise polar rotation
		191 - 192	Stop
		193 - 255	Counterclockwise and infinite rotation
8	Dimmer	0 - 255	Linear dimming occrus from dark to light
9	Strobe	0 - 3	Lighting off
		4 - 103	Synchronous strobe speed is ranging from slow to fast
		104 - 107	Light up
		108 - 207	Flat-split strobe speed is ranging from slow to fast
		208 - 212	Light up
		213 - 225	Low speed random flash
		226 - 238	Medium speed random flash
		239 - 251	High speed random flash
		252 - 255	Light up
10	Red	0 - 255	Red dimming
11	Green	0 - 255	Green dimming
12	Blue	0 - 255	Blue dimming

13	White	0 - 255	White dimming
14	Linear CTO	0 - 255	Linear color temperature regulation
15	Macro Color	0 - 255	Color macro function
16	Static effect	0 - 255	Static effect
17	Dynamic effect	0 - 255	Dynamic effect
18	Effect speed	0 - 255	Effect speed
19	Background R	0 - 255	The background is red
20	Background G	0 - 255	The background is green
21	Background B	0 - 255	The background is blue
22	Background W	0 - 255	The background is white
23	Reset	0 - 250	NF
		251 - 255	The lamp body reset was valid for 5s
24	R1 led dimming	0 - 255	R1 led dimming
25	G1 led dimming	0 - 256	G1 led dimming
26	B1 led dimming	0 - 257	B1 led dimming
27	W1 led dimming	0 - 258	W1 led dimming
.....	.....	.....	.....
.....	.....	.....	.....
48	R7 led dimming	0 - 255	R7 led dimming
49	G7 led dimming	0 - 256	G7 led dimming
50	B7 led dimming	0 - 257	B7 led dimming
51	W7 led dimming	0 - 258	W7 led dimming

09/ Troubleshooting

Problem	Potential cause(s)	Remedies
Fixture does not respond or appears to be off.	No power to the fixture.	Confirm that the power is switched on and cables are plugged in.
	No output from PSU.	Replace the PSU.
Fixture suddenly turned off.	Power was turned off.	Check the power supply, switches and breakers
Light output cuts out intermittently.	Fixture is too hot.	Check fixture's stored error messages for more information. Allow fixture to cool. Clean fixture. Reduce ambient temperature.
Fixture suddenly stopped responding.	DMX cables were disconnected.	nspect DMX cables.
Fixture operates irregularly / abnormal.	Incorrect DMX address or DMX mode.	Inspect and enter the correct DMX address or mode
	DMX link is not terminated.	Install a XLR 120ohm DMX termination at the end of the DMX link.
	Bad data link.	Replace or repair defective cables and/or connections
	One of the fixtures is defective and is disturbing data transmission on the link.	Track and isolate the corrupted fixture. Have the fixture serviced by a qualified technician.
Pan / tilt is skipping / shuddering	Pan/ tilt locks are not released.	Release the pan / tilt locks
	Obstacles are within the required pan / tilt clearance.	Inspect and remove any obstacles constraining free operation of the pan / tilt.
	The Hall element is damaged	Replace the Hall element
	The magnetic steel fell out	Replace the magnetic steel

10/ Fixture Cleaning

Regular cleaning is very important for fixture life and performance. Buildup of dust, dirt,
smoke particles, fog fluid residues, etc. degrades the fixture's light output and cooling ability.
Cleaning schedules for lighting fixtures vary greatly depending on the operating environment.
It is therefore impossible to specify precise cleaning intervals for the fixture. Environmental
factors that may result in a need for frequent cleaning include:

Use of smoke or fog machines.

High airflow rates (near air conditioning vents, for example).

Airborne dust (from stage effects, building structures and fittings or the natural environment at outdoor events, for example).

If one or more of these factors is present, inspect fixtures within their first few hours of operation to see whether cleaning is necessary. Check again at frequent intervals. This procedure will allow you to assess cleaning requirements in your particular situation.
Follow these precautions when cleaning the fixture:

Work in a clean, dry, well-lit area.

Use gentle pressure only. A soft lint-free cloth dampened with a solution of water and a
mild detergent is recommended, under no circumstances should alcohol, solvents or abrasives be used! Use care when cleaning optical components: surfaces are fragile and
easily scratched.